规格.参数Specifications

项目Item		规格.参数specification		备注 Remark
线圈阻抗 Coil impedance		20±6% Ω		+20°C 测试
驱动旋转角度 Drive rotation angle		78±2 °		
静态保持力Static hold force		≥0.4 g		
操作电压 Operating voltage		3.3~6.0 V		-30～80℃
操作时间 Operation time		100~200 ms		-30～80℃
推荐驱动条件Recommended driving conditions		3.3V 100ms		-30～80℃
极 性 Polarity		红线(+)黑线(-)为红外滤光片 Red(+) black(-)is IR filter		白天工作状态 Day
		红线(-)黑线(+)为白玻璃片 Red(-) black(+) is dummy glass		夜晚工作状态 Night
漆包线规格 Enameled wire specification		线径0.075,绝缘等级B Wire diameter 0.075, insulation classB		
滤光片基材 Filter substrate		D263T Alkali Free Borosilicate Glass D263T		
薄膜沉积 Thin film deposition		低折射率材料 Low refractive index material	SIO2	
		高折射率材料 High refractive index material	TI3O5	
红外滤光片 IR filter	尺寸 size	6mm×5.3mm×(0.21±0.02)mm		
	镀膜层数 Number of coating layers	S1面:多层 S2面:多层 S1 surface: multi-layer S2 surface: multi-layer		
	镀膜规格 Coating specifications	400nm～420nm Tave>88% T>85% 420nm～620nm Tave>96% T≥94% 650±10nm T=50% 斜率80%～20%<20nm 680nm T<2% 700nm～1000nm T<1% 1000nm～1100nm Tave<2% T<4%		测试分光时去掉遮尘片单独测试
白玻璃片 Dummy glass	尺寸 size	6mm×5.3mm×(0.175±0.02)mm		
	镀膜层数 Number of coating layers	S1面:多层 S2面:多层 S1 surface: multi-layer S2 surface: multi-layer		
	镀膜规格 Coating specifications	420nm～1100nm T>92% Tave>96%		测试分光时去掉遮尘片单独测试
遮尘片 Dust glass	尺寸 size	6.4mm×6.4mm×(0.145±0.02)mm		
	镀膜层数 Number of coating layers	S1面:多层 S2面:多层 S1 surface: multi-layer S2 surface: multi-layer		
	镀膜规格 Coating specifications	420nm～1100nm T>92% Tave>96%		
操作环境 Operating environment		温度-30～80℃,湿度0～90% Temperature -30～80 ° C, humidity 0～90%		
存放环境 Storage environment		温度-30～80℃,湿度0～90% Temperature -30～80 ° C, humidity 0～90%		

技术要求:Technology requirement:

1.磁块表面喷涂派瑞林；Spray parylene on the surface of the magnet;

2.U型铁表面电镀锌镍合金。Plating zinc-nickel alloy on the surface of U-shaped iron.

3.环境品保：产品符合‘ROHS’环境管理规定。Environmental Quality Assurance: Products comply with ‘ROHS’ environmental management regulations.

带“※”为重点管控尺寸，要求CPK≥1.33;单向公差要求CPU或CPL≥1.33

外形图 [Outside drawing]

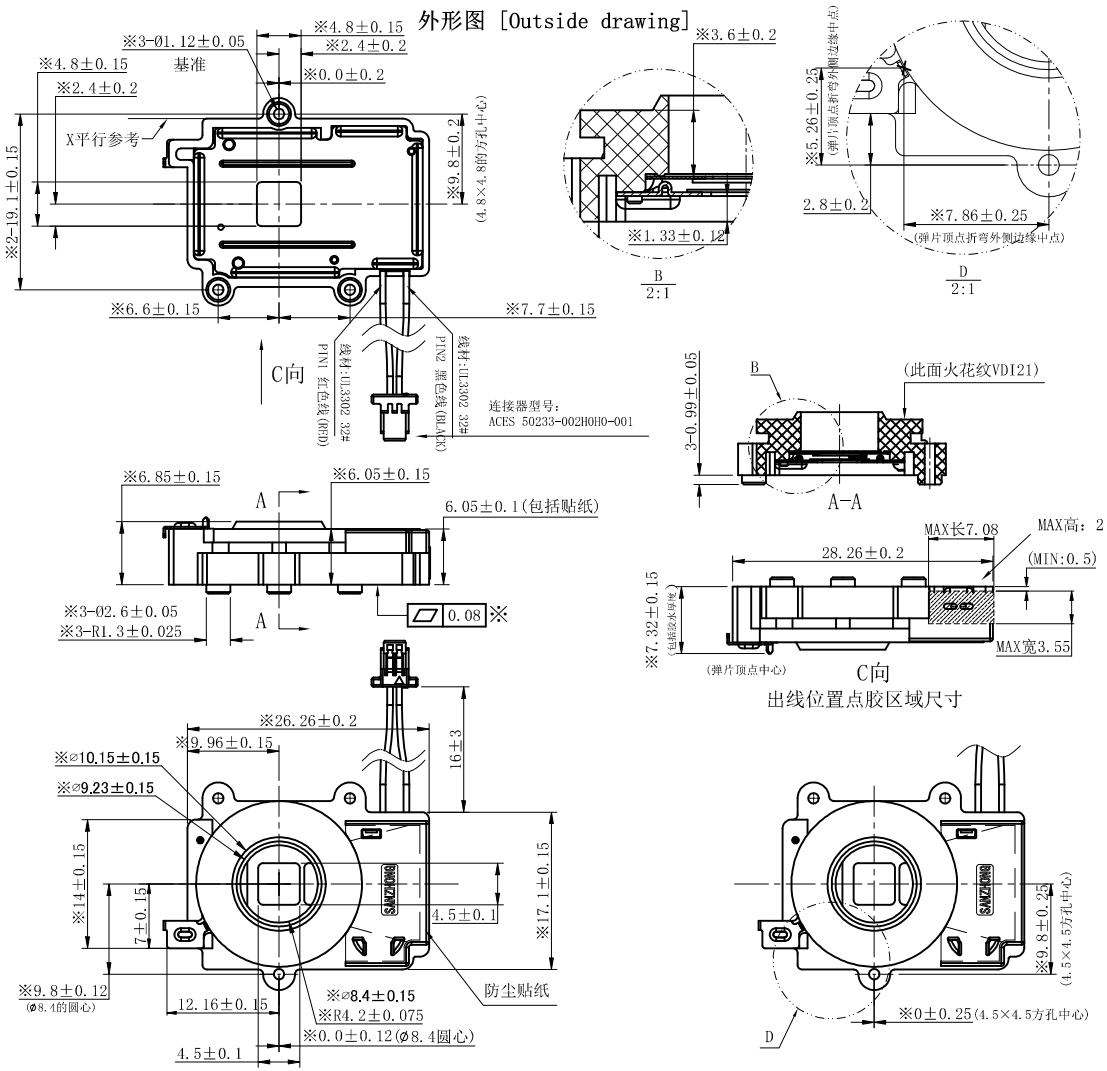

REV.	DATE	DESCRIPTION	REVISED
4			
3			
2	2023.9.5	Ø1.12±0.1和Ø2.6±0.1尺寸更改为Ø1.12±0.05和Ø2.6±0.05	
1	2023.8.24	在ZHS-0304-05C20-S-F-03-P基础上更改镜片厚度为IR:0.21/AR:0.175厚度 型号更改为: ZHS-0304-05D20-S-F-05-P	

TOLERANCE UNLESS OTHERWISE SPECIFIED

0~3	±0.05	50~100	±0.15
3~6	±0.06	100~200	±0.20
6~10	±0.08	200~300	±0.30
10~50	±0.10	ANGLE	±30 '

PROJECTION:

MATERIAL 材质:
本体塑胶 body plastic
GN-3620LM

	NAME	DATE
DRAWN (制图)		
DESIGN (设计)		
CHECKED (检核)		
APPR. (承认)		

FINI.TREAT 表面处理

HEAT TREAT 热处理

SANZHONG P/N: ZHS-0304-05D20-S-F-05-P

Customer project: Sherry (P1.1)

REV. A

SCALE 4:1 PAGE SHEET 1 OF 1